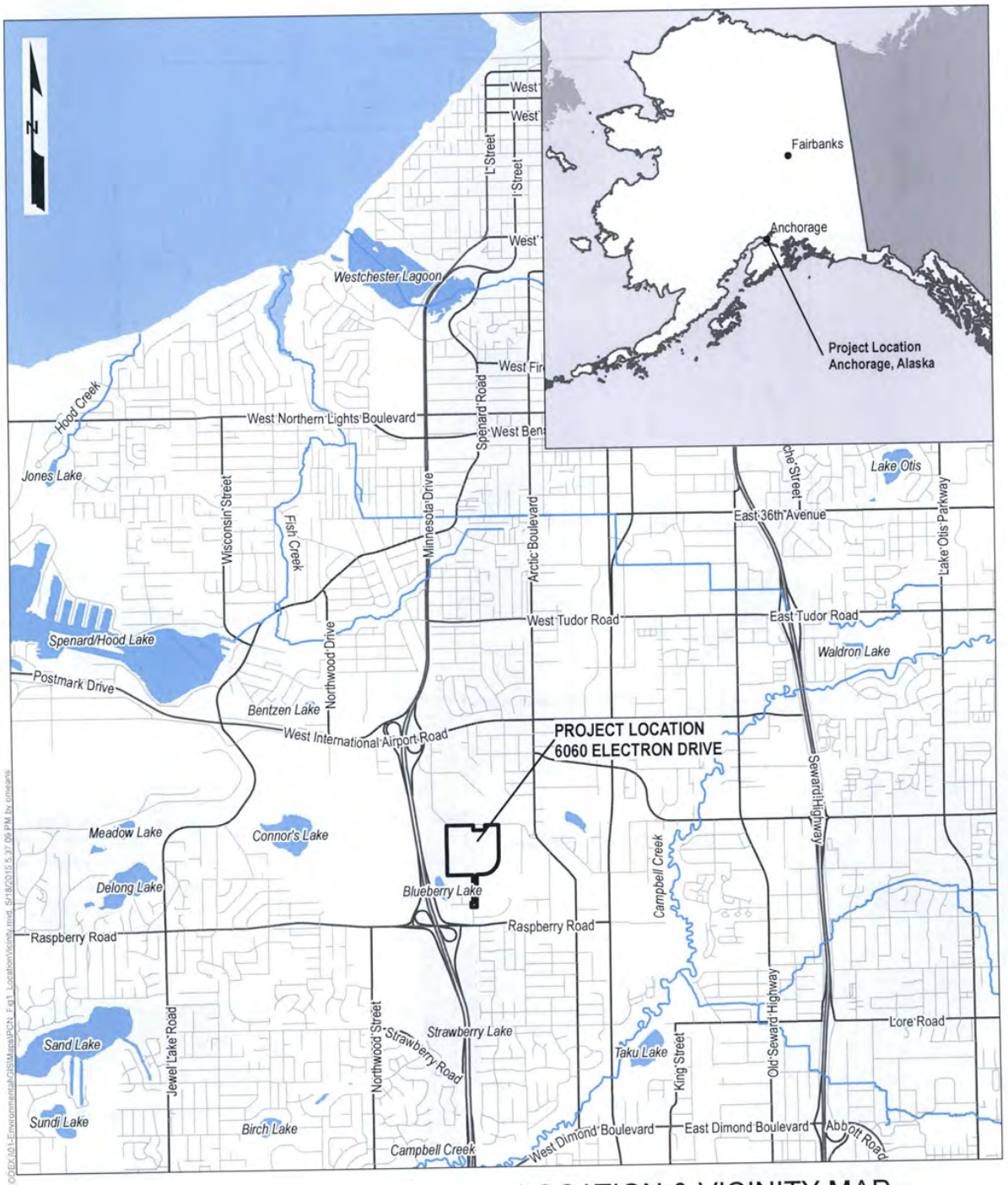

LOCATION & VICINITY MAP

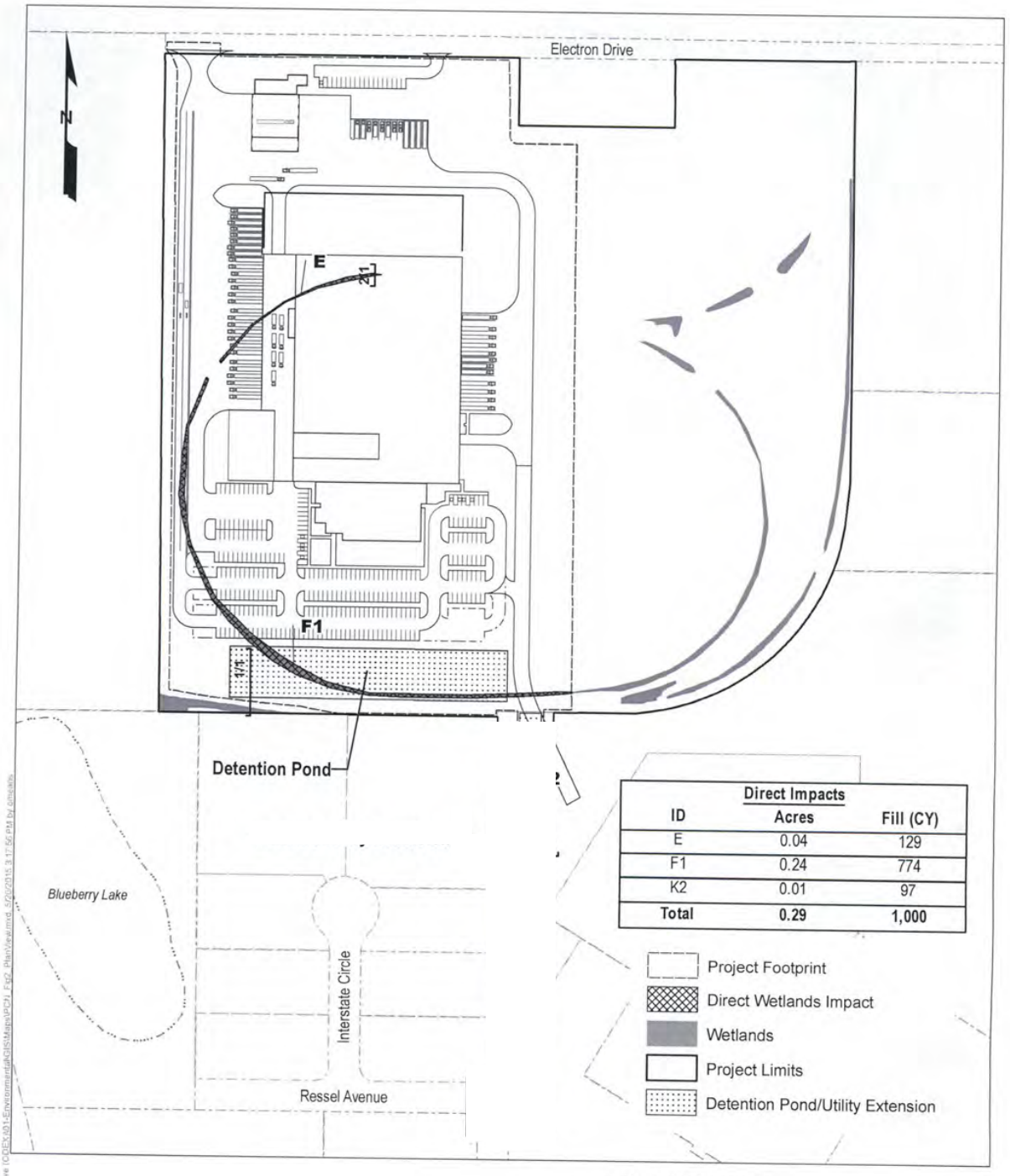

Direct Impacts		
ID	Acres	Fill (CY)
E	0.04	129
F1	0.24	774
K2	0.01	97
Total	**0.29**	**1,000**

PLAN VIEW

0 150 300
SCALE IN FEET

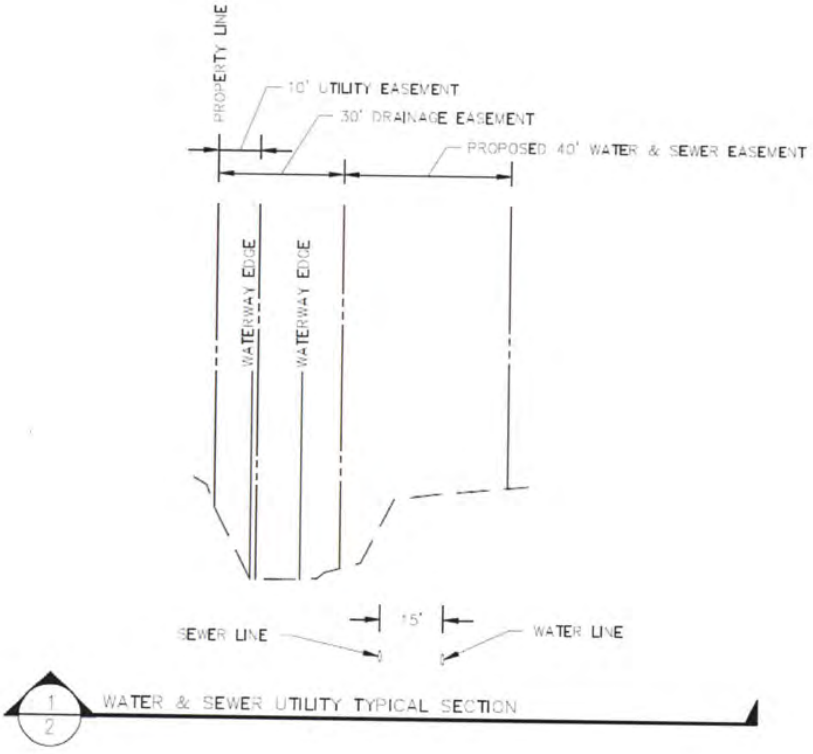

SECTION VIEW
SHEET 2

Saved: H:\0941\14-115 Election Drive (ODEX)\01-Environmental\GIS\Maps\PDI_Fig4_Section\view2.mxd 9/18/2015 8:51:19 AM by cmcavin

C:\Civil 3D Projects\32\61872-01\Concept\MC14-CS-CP-Odom-61872.dwg PLOT DATE 2015-9-11 11:04 SAVED DATE 2015-09-10 13:14 USER: aabaza

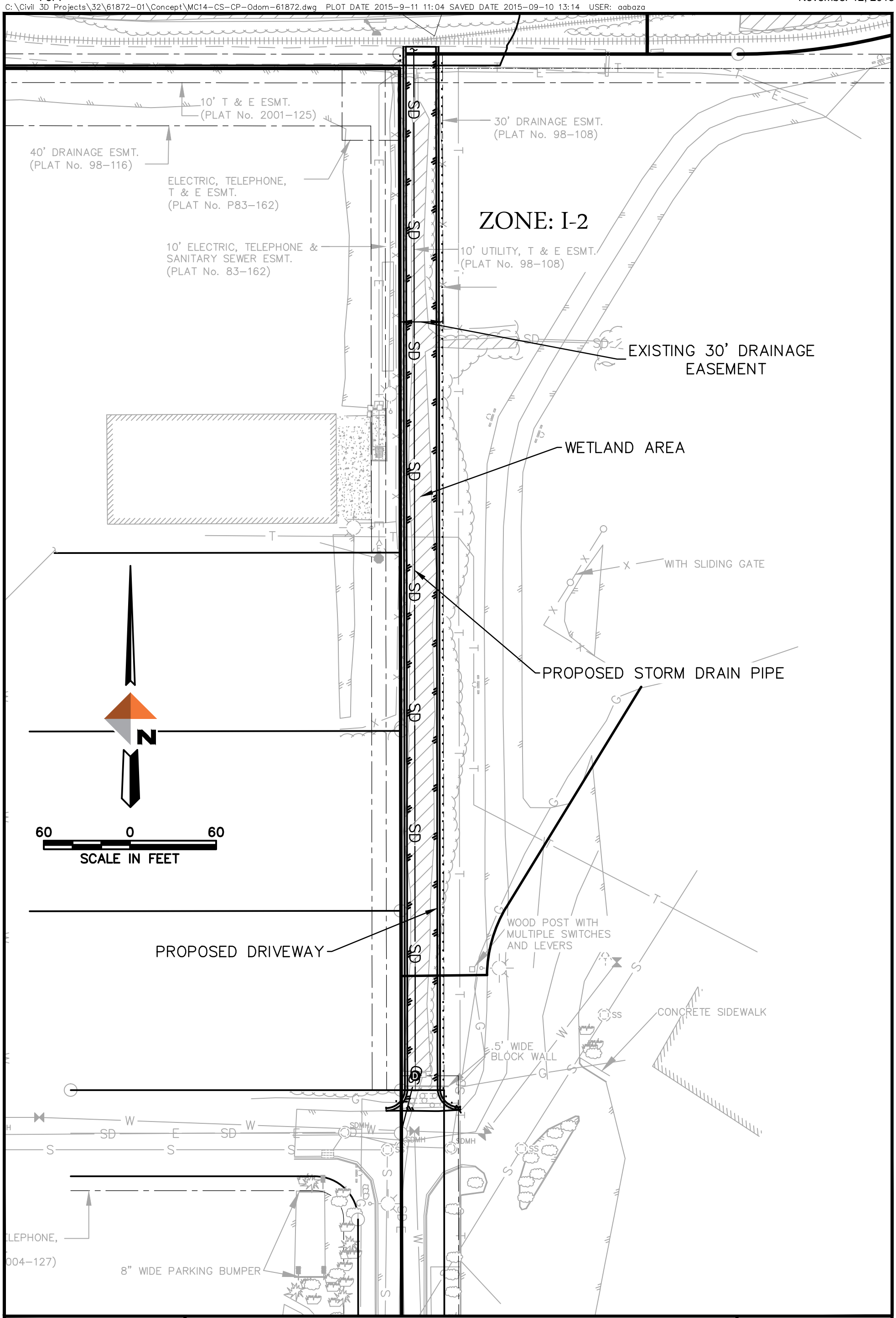

DOWL
WWW.DOWL.COM

ODEX COMMERCIAL DEVELOPMENT
NATIONWIDE PERMIT MODIFICATIONS

PROJECT	61872.01
DATE	/ /

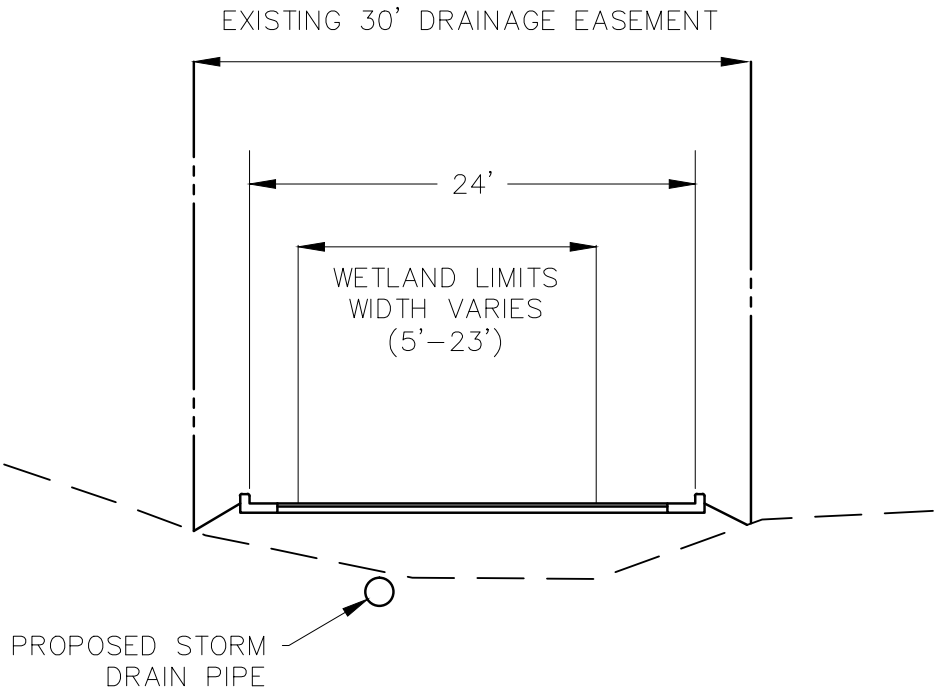

1/2 ACCESS TYPICAL SECTION

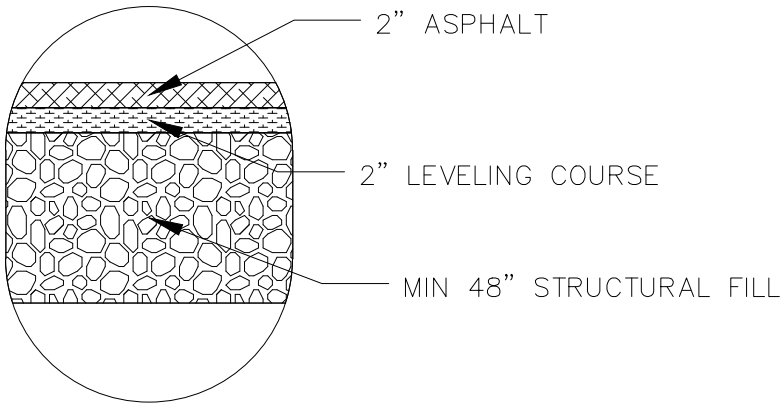

2/2 STRUCTURAL SECTION

DOWL
WWW.DOWL.COM

ODEX COMMERCIAL DEVELOPMENT
NATIONWIDE PERMIT MODIFICATIONS

PROJECT 61872.01
DATE / /

C:\Civil 3D Projects\32\61872-01\Concept\MC14-CS-CP-Odom-61872.dwg PLOT DATE 2015-9-11 11:05 SAVED DATE 2015-09-10 13:14 USER: aabaza

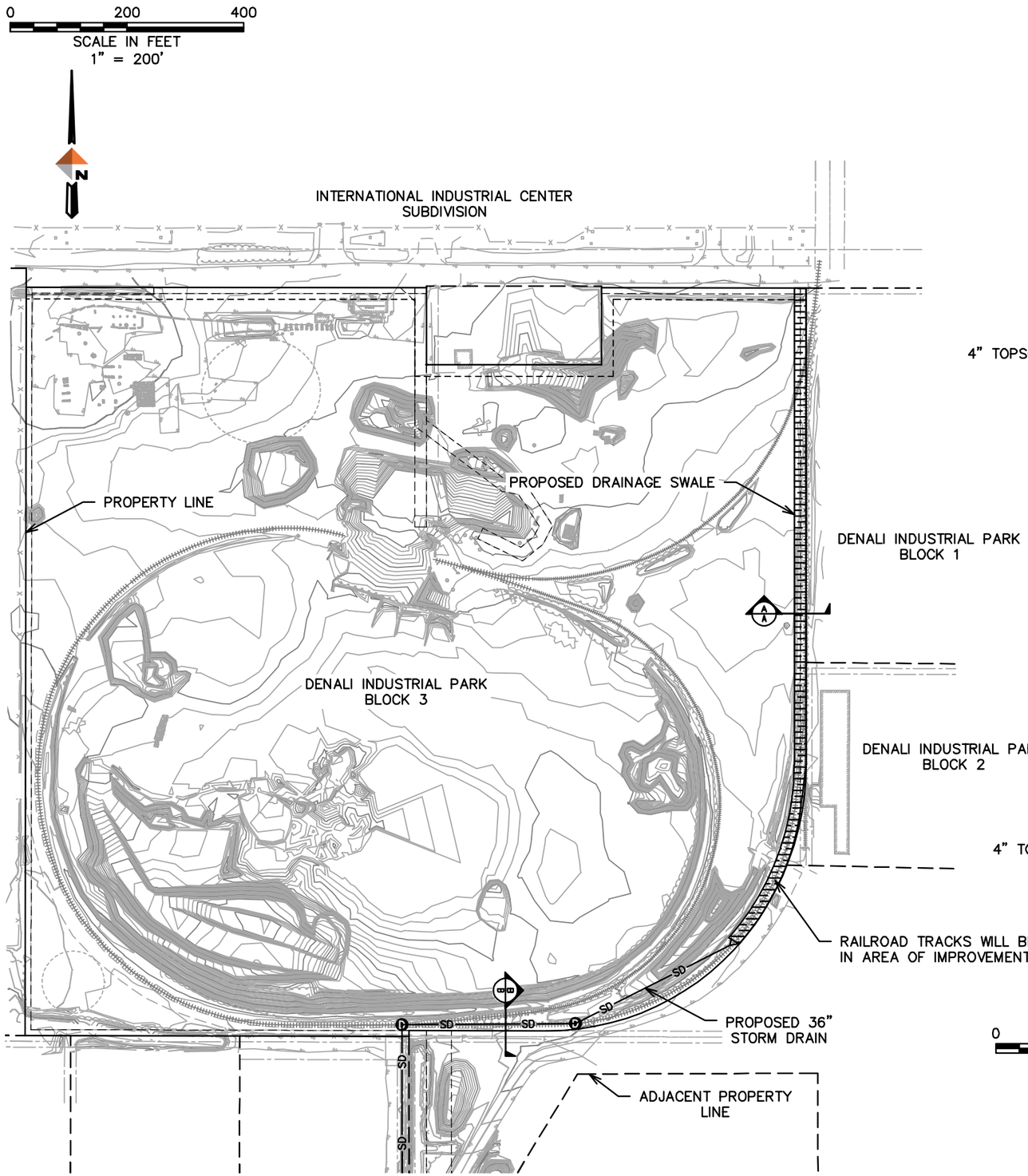

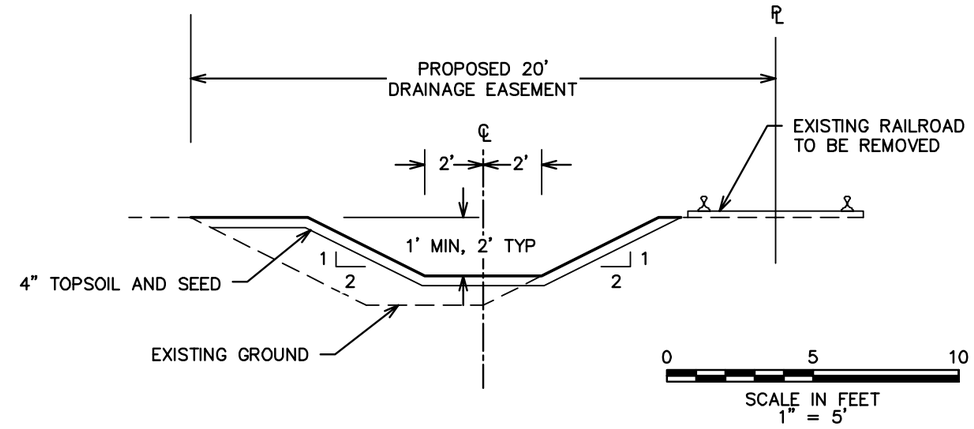

A/A DRAINAGE SWALE CROSS SECTION
NTS

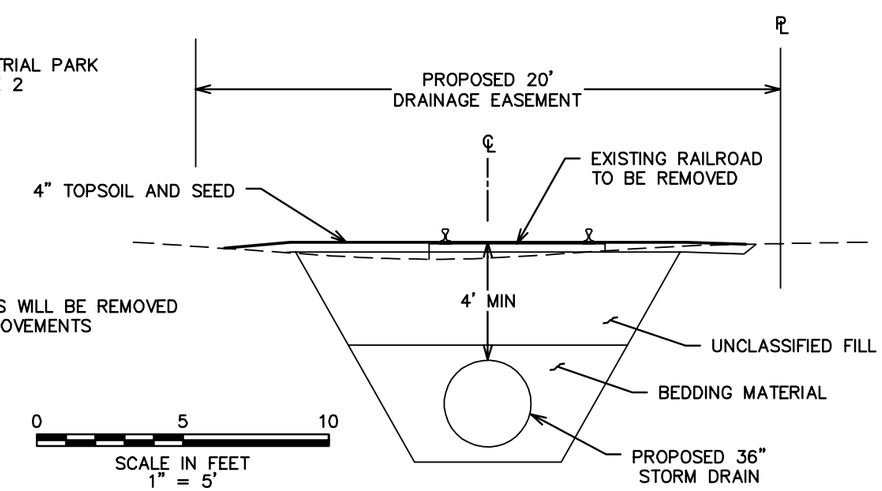

B/B STORM DRAIN CROSS SECTION
NTS

PROJECT 1132.61872.01
DATE

SWALE

ODOM - GRANITE PARCEL
ANCHORAGE, ALASKA
DRAINAGE SWALE

DOWL
WWW.DOWL.COM

C:\Civil 3D Projects\32\61872-01\Concept\MC14-CS-CP4-Odom-61872.dwg PLOT DATE 2015-10-27 16:00 SAVED DATE 2015-10-27 15:56 USER: nconway

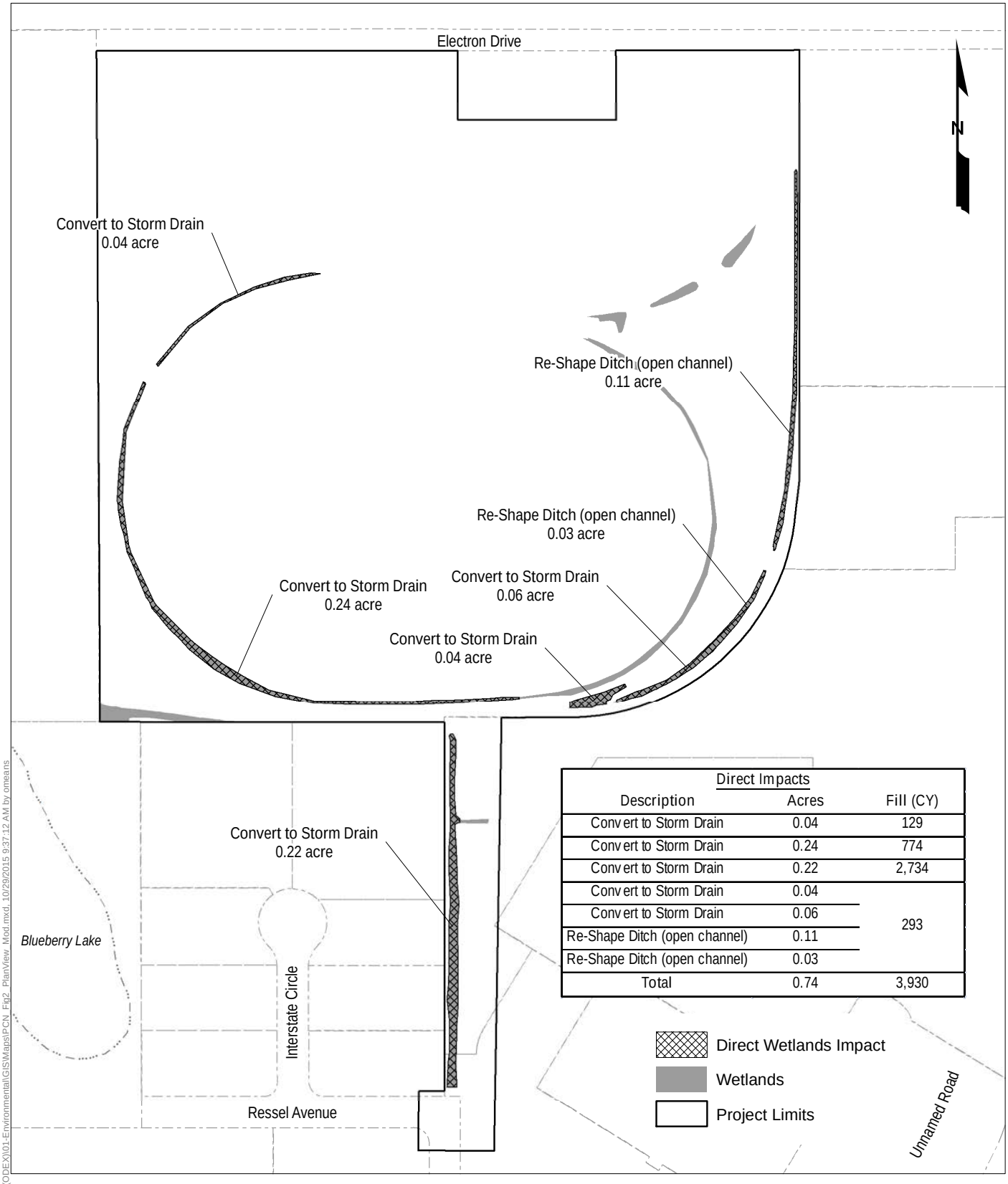

Direct Impacts		
Description	Acres	Fill (CY)
Convert to Storm Drain	0.04	129
Convert to Storm Drain	0.24	774
Convert to Storm Drain	0.22	2,734
Convert to Storm Drain	0.04	293
Convert to Storm Drain	0.06	
Re-Shape Ditch (open channel)	0.11	
Re-Shape Ditch (open channel)	0.03	
Total	0.74	3,930

PLAN VIEW

0 150 300
SCALE IN FEET

Saved: H:\jobs\14-115 Electron Drive (ODEX)\01-Environmental\GIS\Maps\PCN_Fig2_PlanView_Mod.mxd, 10/29/2015 9:37:12 AM by omeans